keka

₹36 Lakhs saved through attrition analysis

How Acme Corp's HR team managed to plug retention and saved lakhs in onboarding and training costs.



keka

In-the-moment huddle: Sneha schedules an adhoc meeting

It was a tough day. As Rohit opened the door of the meeting room, a blast of icy cold air hit him in the face, making him flinch. Before taking his seat, he seized the AC remote and increased the temperature to a more tolerable 24.

The meeting was called by his HR Head Sneha who entered the room a minute later, nodding a greeting to him. Soon, the entire recruitment team trooped in, taking their seats and opening the laptops as Rohit plugged in the projector.

When everyone was seated, Sneha rose and gave them all a grave look.



I guess we all know why we have gathered here?

she asked, looking at everyone

Well, in the last two years, a 100 of our employees have left us. All within a span of 2 years



Replied Rohit.

Since many left within such a short span, I think we, the recruitment team, are in the dock



Added Rohit, in a rather morose tone.



It’s true that we are here because of new joiner attrition. But there is another, more serious angle to it that we have missed

Said Sneha, clicking a button on her laptop and gesturing to the projected presentation.

There was a collective gasp as everyone tried to make sense of what was being shown to them.

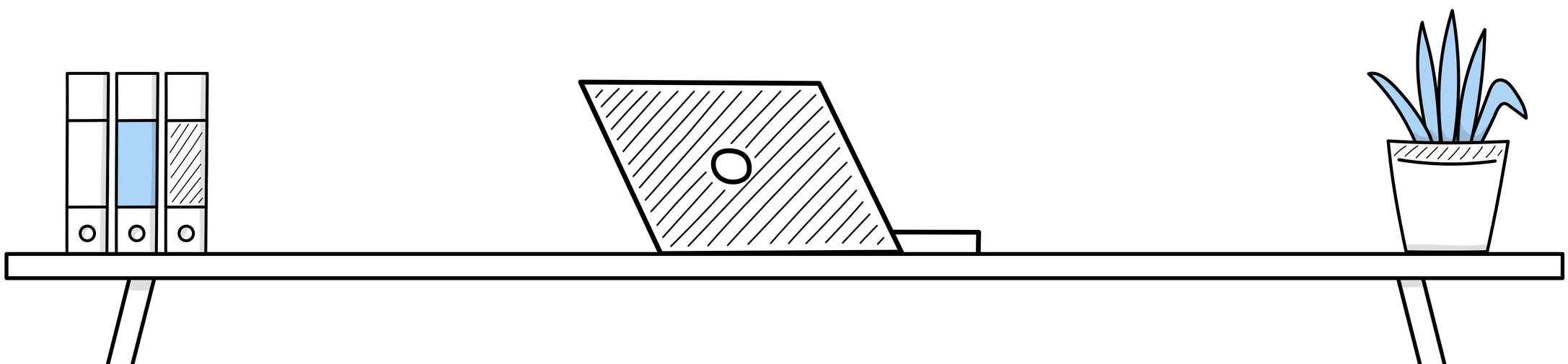

keka

The heavy toll of employee attrition

36 lakh rupees! That's how much we spend on training and onboarding new employees?!



Rohit said.

So, for each employee, we are spending 36,000 rupees for their training!



Replied Arohi.



Yes. 36,000 for each employee. And how many did we onboard in the last one year?

Sneha asked.

There was a pause as everyone tried to open different Excel sheets. Sneha looked at them expectantly, awaiting an answer. After quite some time, they found out the number. It was 109.



It took quite a while. Didn't it?



Now. How many employees did leave us?

Sneha replied.

109. and if the people who have left us are almost same as the number who joined, we have basically spent or should I say *blown* 36 Lakh rupees



Rohit nodded slowly.



Judging by your tone, Rohit, I think you have understood what angle I was talking about earlier and why it’s giving me sleepless nights

Yes, Sneha, I do





Let’s find out what is causing this attrition, especially in the last 12 months

Sneha then asked her team to collate the data regarding all the employees who left them. She also asked them to find out the information on how they were sourced, what was their previous job or place of study, and other details.

The idea behind all of this, she explained, was identifying patterns. She scheduled another meeting later in the noon at 3:00 PM. However, as she disconnecting her laptop from the projector, she saw everyone exchanging worried glances as they rose.



Why the long faces?

Sneha asked.

Well... we will have to find out all the data of more than 100 employees. It will take longer. Much longer than 3:00 PM



Arohi said haltingly.



Please don’t tell me you all were planning to gather this data manually?!

said Sneha, looking at them in surprise.

Rohit and Arohi looked at each other and didn't respond. “I guess you folks were not paying attention during the onboarding sessions of our new HRMS,” said Sneha, shaking her head.



Take your seats. We are not done

Sneha said, logging on to Keka.



keka

The attrition backstory

Since the December of 2022, the employee headcount at ACME Corp started to increase rapidly and reached 350 by the end of 2023. Earlier, since the organization was structured as a close-knit team, there was barely any attrition recorded. However, with the huge growth also came huge attrition.

While the hiring rate grew at 30% YoY, the attrition increased to a worrying 38%. ACME Corp began losing employees faster than it was hiring. In the month of May, the company lost 15 employees. Sneha realized that they had to do something soon.

Sneha wanted to analyze attrition based on college, city, and other background details so that she could identify patterns. Her organization had recently deployed Keka, an HRMS built for SMEs. She remembered that it enabled her to conduct in-depth analysis of all major recruitment processes.



The good, the bad, and the ugly

As everyone put their heads together and Sneha tweaked the analytics within Keka, they were surprised with the findings.

- When they analyzed the freshers' hiring data, they realized that employees who came from tier-2 cities had a higher retention rate compared to those from metro cities. Sneha also remarked that many of the employees from tier-2 cities had gone on to become team leaders.
- On the contrary, freshers from metro city had not fared well. In the last five years, 50 of the new hires had left right after completing one year in the organization. Sneha had pulled their performance reports and was not surprised to find that their ratings were not higher than 3.
- A further location-wise drill down revealed that all of them were working in the Hyderabad office.
- The cost of hiring new employees was 36,000 rupees. To replace all 50 employees who had left, it had cost the company 18 lakh rupees.

Keka helped Sneha's team find out that in Hyderabad, there were 52 employees with a performance rating of 3 who left the organization in just one year.

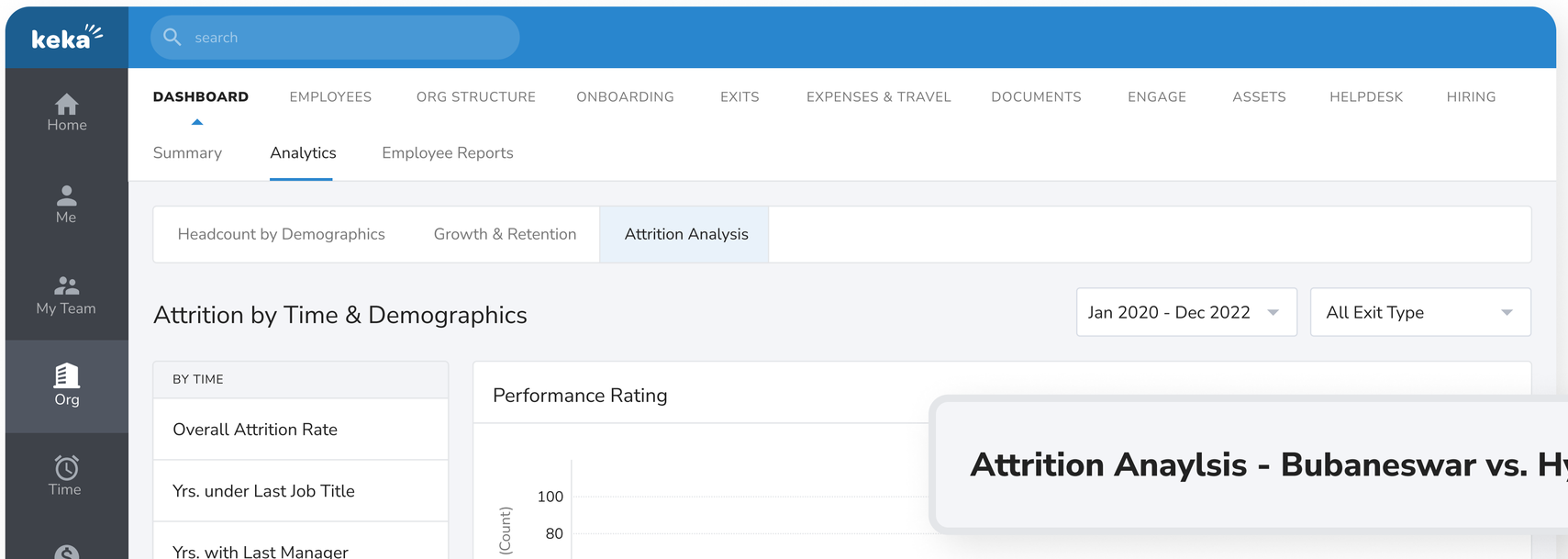

Attrition Anaylsis - Bubaneswar vs. Hyderabad

They also found that new hires in smaller cities have remained with the company for longer. On average, employees stayed 3 years before moving on to another organization. Their performance rating was also great.

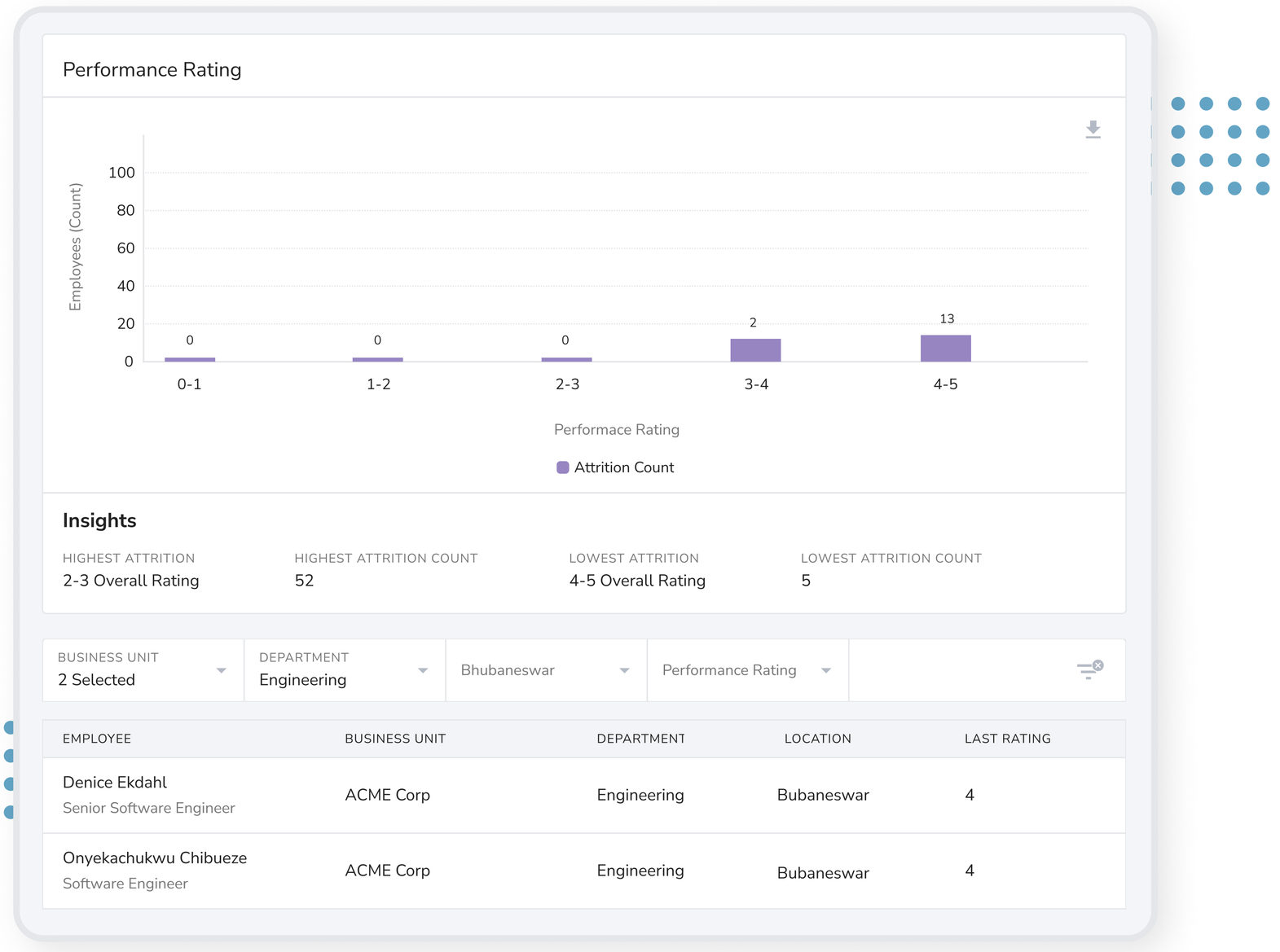

Keka's analysis results in cost-saving initiatives

Sneha and her team spent two more hours observing patterns in the attrition data.

"Based on our current findings, this is what we need to stop. *With. Immediate. Effect.*" Sneha said, halting at each word at the end of her sentence as she started scribbling on the white board behind her:

- ❌ Stop campus recruitment from Hyderabad since all employees left within 2 years.
- ❌ Stop hiring for leadership roles from external sources
- ❌ Stop hiring MBA students for Customer Success roles
- ❌ Stop hiring from our archrival WayneTech International

"And this is when we need to DO!" said Rohit, as he projected a series of bullet points:

- ✅ Let's choose more tech employees from KLC University
- ✅ Let's build an engineering team from product companies such as ServiceQNL
- ✅ Let's groom internal employees who have exhibited desired competencies and behaviors for leadership roles rather than hiring form outside.
- ✅ Let's be prepared for attrition from employees with 1-3 years of experience resigning in Fall and Spring as they may pursue higher studies



Epilogue

Having identified the causes of attrition, Sneha and her recruitment team were able to take corrective measures and successfully reduced attrition in their company. Source wise analysis of hiring resulted in an increase in the entire hiring process.

keka

About Keka

Everything you need to build a great company

Keka is your people enabler. From automation of people processes to creating an engaged and driven culture, Keka is all you need to build a good to great company.

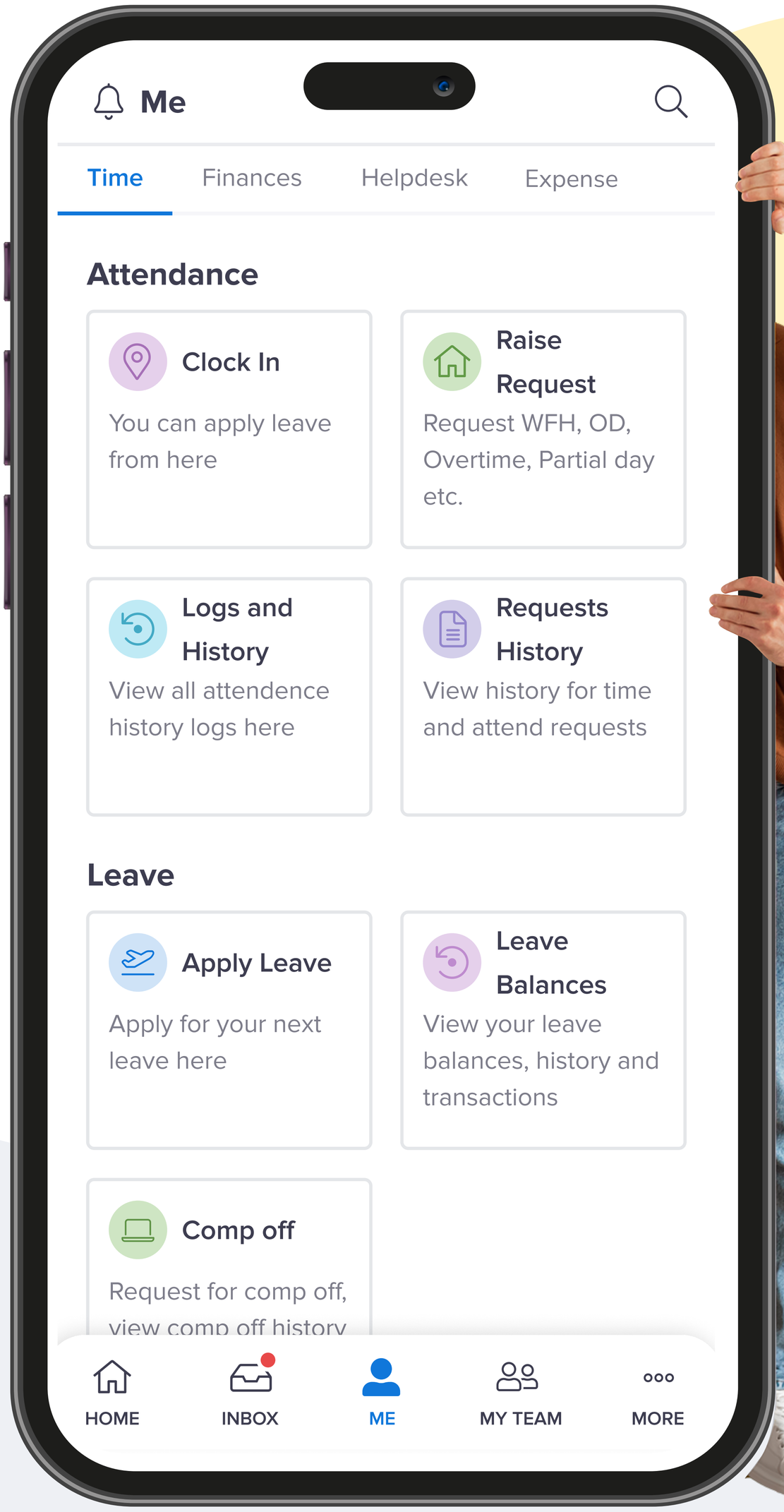



Reach out to us!

+91 8929208062